King Mongkut's Institute of Technology Ladkrabang
Computer Engineering International Program
01276112 Digital System Fundamentals

Lab 4 - Boolean Minimization Using Quine-McCluskey Method

Learning Outcomes

1. Simplify Boolean expression using Quine-McCluskey method.
2. Construct more complicated digital circuit.

1. Experiment

1. The following Boolean expression detects odd prime numbers.

$$f_{(A,B,C,D,E)} = \sum m(1,3,5,7,11,13,17,19,23,29,31)$$

1.1. Use Quine-McCluskey method to find ***prime implicants***.

List 1

min		
1	00001	✓
3	00011	✓
5	00101	✓
17	10001	✓
7	00111	✓
11	01011	✓
13	01101	✓
19	10011	✓
23	10111	✓
29	11101	✓
31	11111	✓

List 2

min		
1,3	000-1	✓
1,5	00-01	✓
1,7	-0001	✓
3,7	00-11	✓
3,11	0-011	P_4
3,19	-0011	✓
5,7	001-1	✓
5,13	0-101	P_5
17,19	100-1	✓
7,23	-0111	✓
13,29	-1101	P_6
19,23	10-11	✓
23,31	1-111	P_7
29,31	111-1	P_8

List 3

1,3,5,7	00--1	P_1
1,3,17,19	-00-1	P_2
3,7,19,23	-0-11	P_3

1.2. Use prime implicants obtained from Experiment 1.1 to build **prime implicant chart** and **reduced prime implicant chart**. In addition, show prime implicants selection that covers all minterms.

	1	3	5	7	11	13	17	19	23	29	31
P1	X	X	X	X							
P2	X	X					X	X			
P3		X		X				X	X		
P4		X			X						
P5			X			X					
P6						X				X	
P7									X		X
P8										X	X

$S(A,B,C,D,E) = P_1 + P_2 + P_4 + P_6 + P_7$

$= 00--1 + -00-1 + 0-01 + -1101 + 1-111$

$= \bar{A}\bar{D}E + \bar{D}\bar{C}E + \bar{A}\bar{C}DE + BC\bar{D}E + ACDE$

$= E(\bar{A}\bar{D} + \bar{B}\bar{C} + \bar{A}\bar{C}D + BC\bar{D} + ACD)$

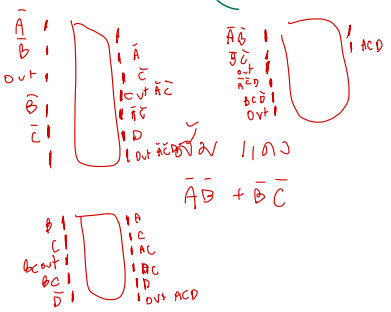

$\bar{A}\bar{D} + \bar{B}\bar{C}$

$1(00 + 01 + 010 + 100)$

$1(0 + 0 + 0 + 0) = 0$

Nucker Ducker

2' comparator

1.3. Draw logic diagram obtained from Experiment 1.2.

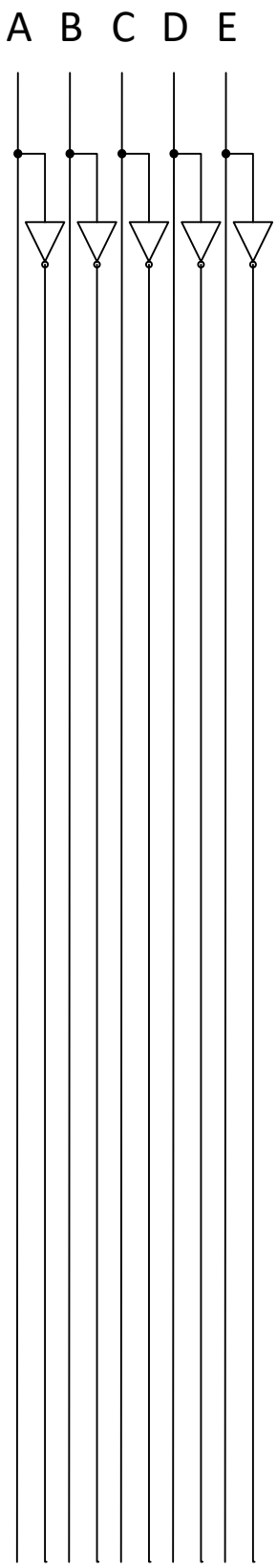

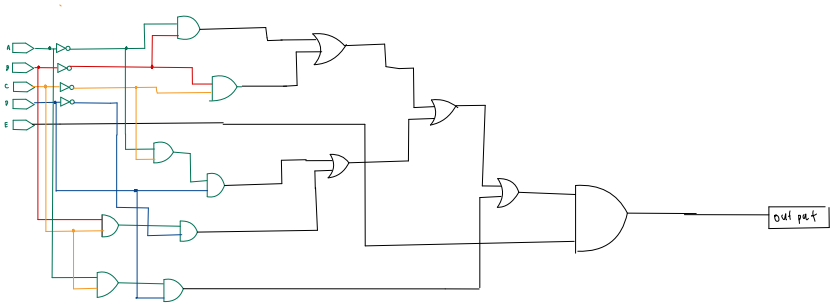

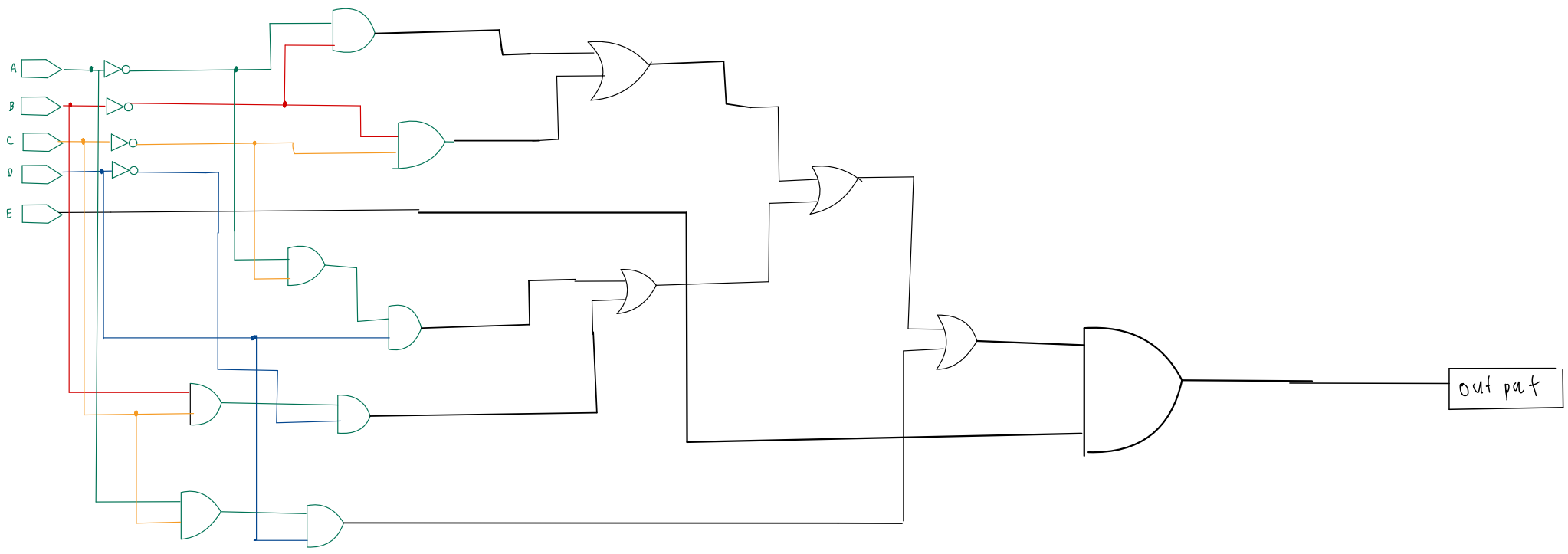
A
B
C
D
E
out put

2. Use Logisim to verify simplified Boolean expression obtained from Experiment 1.2.

2.1 Generate logic circuit by entering minterms and show circuit statistics. Verify the generated circuit using a test vector.

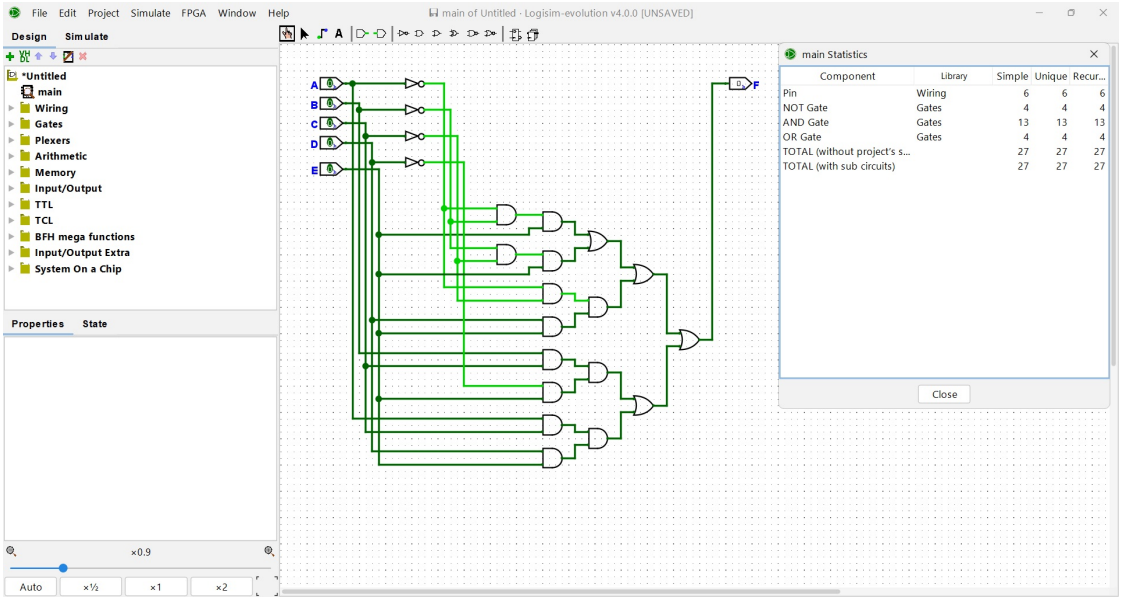

2.2 Generate logic circuit by entering simplified Boolean expression obtained from Experiment 1.2 and show circuit statistics. Verify the generated circuit using a test vector.

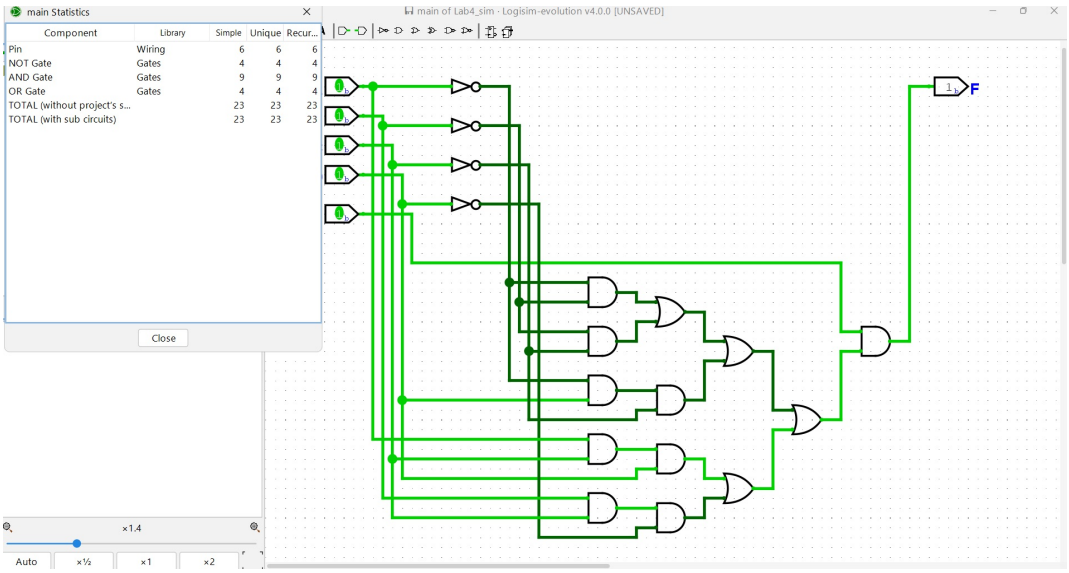

3. Construct the circuit from Experiment 1.3 and record the output.

A	B	C	D	E	Output
0	0	0	0	0	0
0	0	0	0	1	1
0	0	0	1	0	0
0	0	0	1	1	1
0	0	1	0	0	0
0	0	1	0	1	1
0	0	1	1	0	0
0	0	1	1	1	1
0	1	0	0	0	0
0	1	0	0	1	1
0	1	0	1	0	0
0	1	0	1	1	1
0	1	1	0	0	0
0	1	1	0	1	1
0	1	1	1	0	0
0	1	1	1	1	0

A	B	C	D	E	Output
1	0	0	0	0	0
1	0	0	0	1	1
1	0	0	1	0	0
1	0	0	1	1	1
1	0	1	0	0	0
1	0	1	0	1	0
1	0	1	1	0	0
1	0	1	1	1	1
1	1	0	0	0	0
1	1	0	0	1	0
1	1	0	1	0	0
1	1	0	1	1	0
1	1	1	0	0	0
1	1	1	0	1	1
1	1	1	1	0	0
1	1	1	1	1	1

3.1 Describe the problem occurred during constructing more complicated circuit.

The problem we faced is that its hard to remember and keep up with many wire going all over which making fixing difficults.

Lab 4 Submission

Date 25/12/25 Group No. 7

1. Student ID 68011563 Name Thawin Wannawijit

2. Student ID 68011528 Name Supakorn Tunsudjaroenying

3. Student ID 68011428 Name Pakornklet Suteevaphat

Checkpoints

Experiment 1 (10 pts)

Experiment 2 (5 pts)

Experiment 3 (10 pts)

Questions

1. Can you minimize the following Boolean expression using K-Map method. If you can, do the demonstration. Or specify the reason if you cannot.

$$f(A,B,C,D,E) = \sum m(1,3,5,7,11,13,17,19,23,29,31)$$

Yes, you can

$f(A,B,C,D,E) = \sum m(1,3,5,7,11,13,17,19,23,29,31)$

A,B \ C,D,E	000	001	011	010	110	111	101	100
00	0	1	1	0	0	1	1	0
01	0	0	1	0	0	0	1	0
11	0	0	0	0	0	1	1	0
10	0	1	1	0	0	1	0	0

$= \bar{A}\bar{B}E + \bar{B}\bar{C}E + \bar{A}\bar{C}DE + BC\bar{D}E + ACDE$

10 + 01 + 110 + 101 +

2. Compare Quine McClusky and K-Map methods for simplification of five or more variables.

K-map is good and fast for up to 4 variable but it it gets more than 5 or more Variable it needs multiple maps/pages, making grouping harder and more likly to make mistakes. Quine-McCluskey a systematic tabular method that works well for 5 or more variable. It finds all Prime implicants. It is more steps by hand but it is more reliable and easier to do for larger simplicity